REVISIONS				
ZONE	REV.	DESCRIPTION	DATE	APPROVED
	A	RELEASED FOR PRODUCTION	5/2/2022	DMM

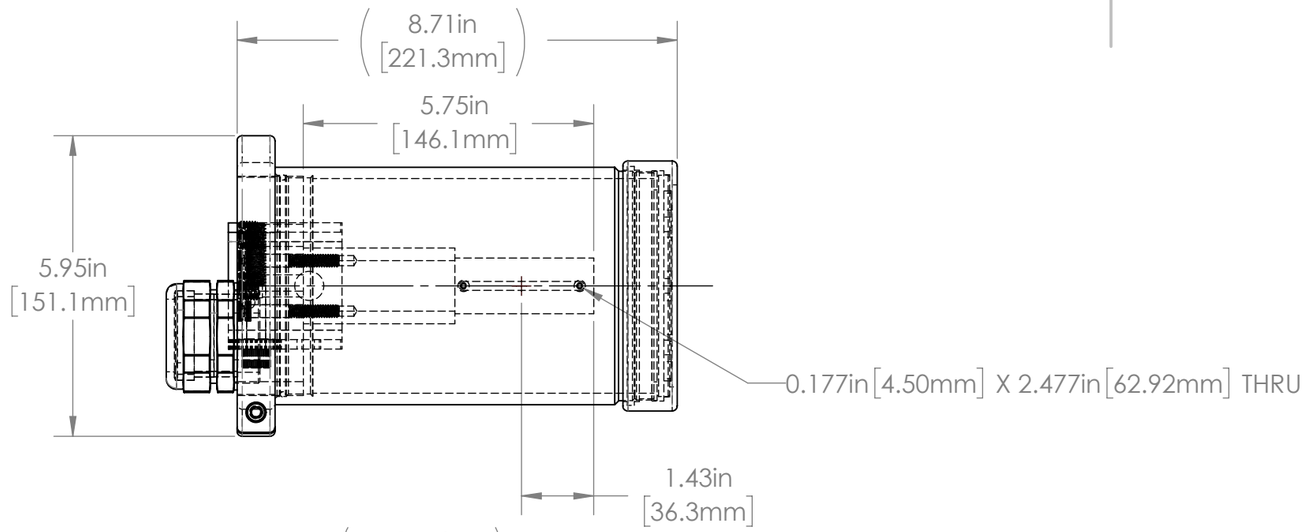

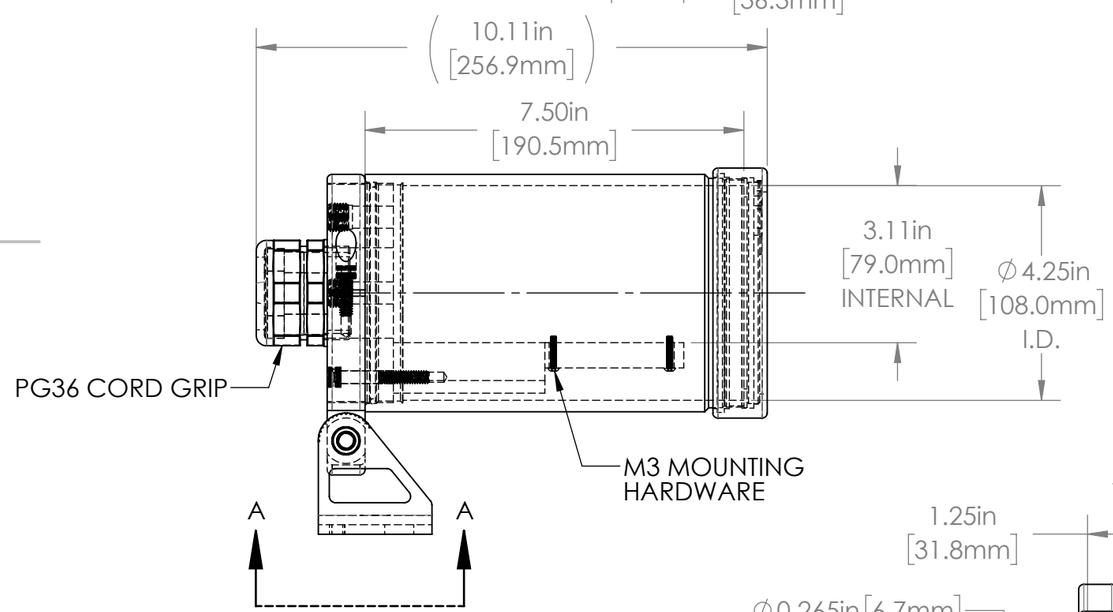

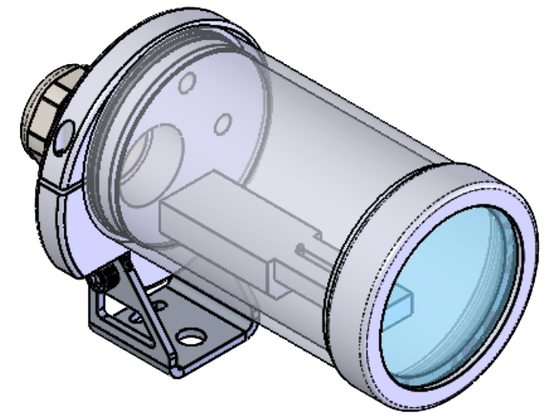

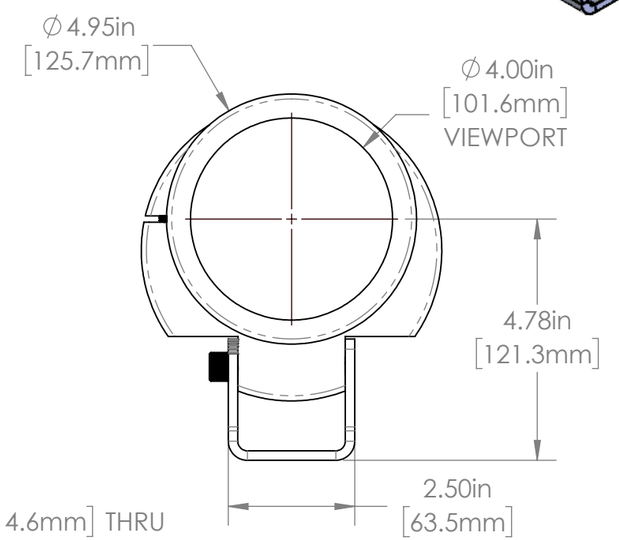

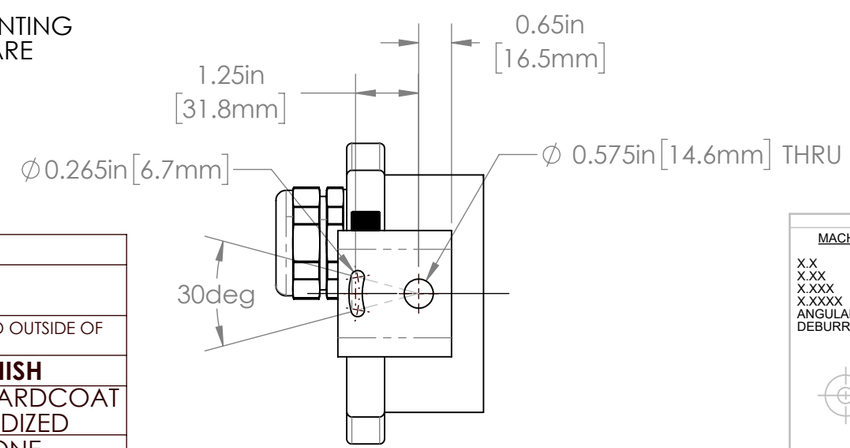

SECTION A-A

47C SERIES PROPERTIES TABLE

ENVIRONMENT RATING	IP68*	
	(*RATING MAY CHANGE IF INSTALLER MILLS CABLE GLAND OUTSIDE OF TOLERANCE)	
COMPONENT	**MATERIAL**	**FINISH**
BODY/BASE/BARREL	6061 ALUMINUM	CLEAR HARDCOAT ANODIZED
VIEWPORT	SODA LIME GLASS	NONE
GASKET	VITON	NONE
ARM/ADAPTER	6061 ALUMINUM	NONE
HARDWARE	18-8 SS	NONE

TOLERANCES UNLESS OTHERWISE SPECIFIED

MACHINING
X.X 0.0250"
X.XX 0.0100"
X.XXX 0.0050"
X.XXXX 0.0005"
ANGULAR 0.5°
DEBURR ALL

SHEET METAL
HOLE TO HOLE (SAME SURFACE)
X.X 0.030"
X.XX 0.010"
X.XXX 0.005"
HOLE TO FOLDED EDGE
X.X 0.035"
X.XX 0.025"
X.XXX 0.015"
FOLD TO FOLD
X.X 0.045"
X.XX 0.035"
X.XXX 0.020"
ANGULAR 1.0°

THIS PRINT IS THE PROPERTY OF APG VISION LLC. THE INFORMATION CONTAINED HEREIN IS CONFIDENTIAL. IT IS NOT TRANSFERABLE. IT IS FURNISHED WITH THE CLEAR UNDERSTANDING THAT IT IS NOT TO BE TRACED, REPRODUCED OR USED IN ANY PROCESS OF MANUFACTURING WITHOUT WRITTEN PERMISSION FROM THE OWNER AND IS RETURNABLE UPON DEMAND. ANY INFRINGEMENT UPON THE PATENT RIGHTS SHOWN HEREIN, WHETHER IN PART OR WHOLE, WILL BE PROSECUTED.

AS PART OF OUR POLICY OF CONTINUING DEVELOPMENT, APG VISION LLC RESERVES THE RIGHT TO ALTER SPECIFICATIONS WITHOUT PRIOR NOTICE.

APG Vision LLC
4055 Alpha Drive
Allison Park, PA 15101 USA
Phone +1 (412) 487-8211
apgvision.com

DESCRIPTION: 47C SEALED 7.5IN BARREL, GLASS VIEWPORT & CENTERSLOT ARM

MATERIAL: SEE BOM

FINISH: SEE BOM

DRAWN BY:	DATE:	SCALE:	SHT-SIZE:	APPROX. WEIGHT (LBS)
DMM	5/2/2022	1:3	B	6.7296
CHECKED BY:	DATE:	PART NUMBER:		REVISION
DMM	5/2/2022	47C-AB		A

Sheet1 of 1