REVISIONS				
ZONE	REV.	DESCRIPTION	DATE	APPROVED
	A	PREVIOUSLY CALLED 21-045 RELEASED FOR PRODUCTION	9/10/2021	DMM

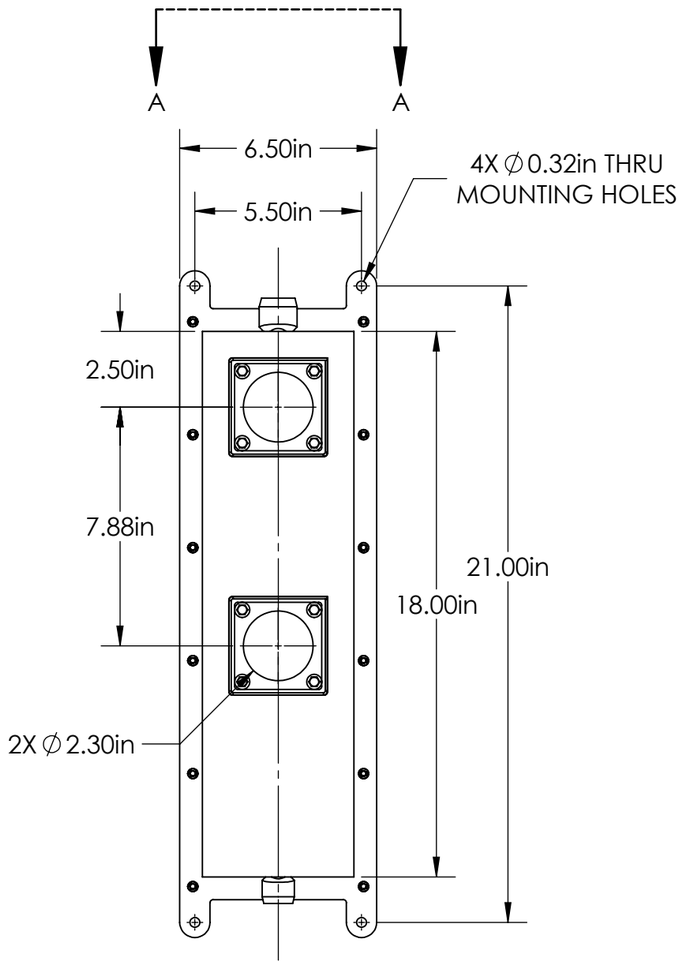

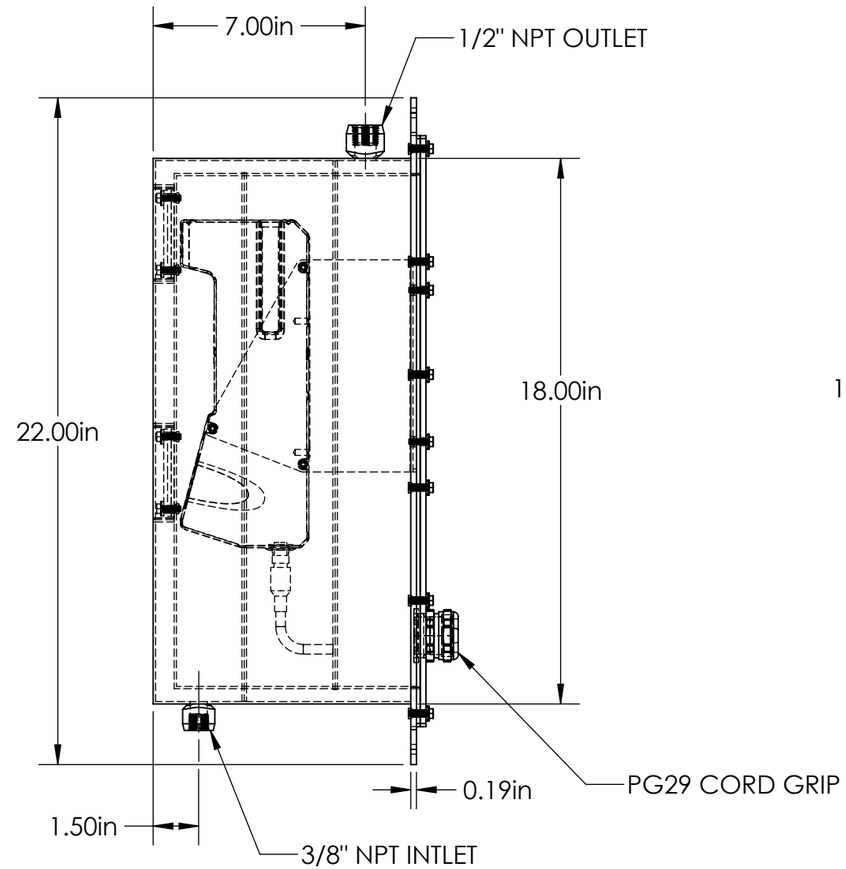

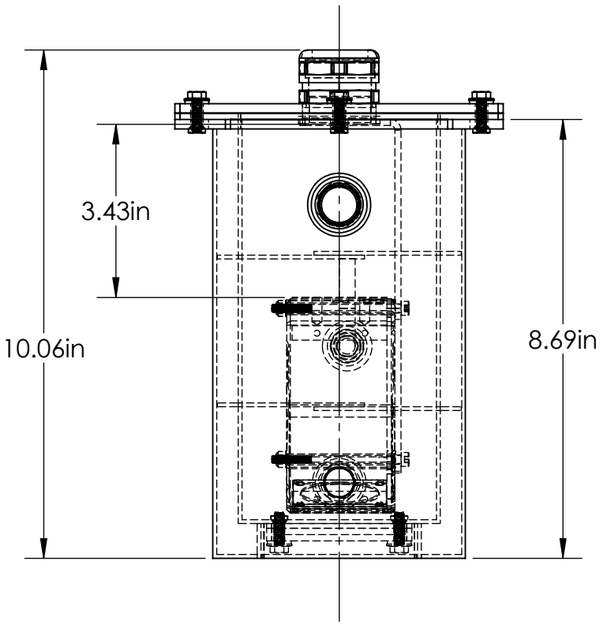

SECTION A-A
SCALE 1 : 3

CC SERIES PROPERTIES TABLE		
ENVIRONMENT RATING	IP68*	
	(*RATING MAY CHANGE IF INSTALLER MILLS CABLE GLAND OUTSIDE OF TOLERANCE)	
COMPONENT	**MATERIAL**	**FINISH**
BODY	304 SS	BURNISHED
VIEWPORT	BOROSILICATE GLASS	NONE
GASKET	SILICONE	NONE
ARM/ADAPTOR	304 SS	NONE
HARDWARE	316 SS - EXTERNAL, 18-8 SS - INTERNAL	NONE

TOLERANCES UNLESS OTHERWISE SPECIFIED

MACHINING

X.X	0.0250"
X.XX	0.0100"
X.XXX	0.0050"
X.XXXX	0.0005"
ANGLULAR	0.5°
DEBURR ALL	

SHEET METAL

HOLE TO HOLE (SAME SURFACE)

X.X	0.030"
X.XX	0.010"
X.XXX	0.005"

HOLE TO FOLDED EDGE

X.X	0.035"
X.XX	0.025"
X.XXX	0.015"

FOLD TO FOLD

X.X	0.045"
X.XX	0.035"
X.XXX	0.020"
ANGLULAR	1.0°

THIS PRINT IS THE PROPERTY OF APG VISION LLC. THE INFORMATION CONTAINED HEREIN IS CONFIDENTIAL. IT IS NOT TRANSFERABLE. IT IS FURNISHED WITH THE CLEAR UNDERSTANDING THAT IT IS NOT TO BE TRACED, REPRODUCED OR USED IN ANY PROCESS OF MANUFACTURING WITHOUT WRITTEN PERMISSION FROM THE OWNER AND IS RETURNABLE UPON DEMAND. ANY INFRINGEMENT UPON THE PATENT RIGHTS SHOWN HEREIN, WHETHER IN PART OR WHOLE, WILL BE PROSECUTED.

AS PART OF OUR POLICY OF CONTINUING DEVELOPMENT, APG VISION LLC RESERVES THE RIGHT TO ALTER SPECIFICATIONS WITHOUT PRIOR NOTICE.

APG Vision LLC
4055 Alpha Drive
Allison Park, PA 15101 USA
Phone +1 (412) 487-8211
apgvision.com

DESCRIPTION: 3D PROFILER LIQUID COOLED ENCLOSURE

MATERIAL: SEE BOM

FINISH: SEE BOM

DRAWN BY:	DATE:	SCALE:	SHT-SIZE:	APPROX. WEIGHT (LBS)
DMM	9/10/2021	1:5	B	33.1054
CHECKED BY: DMM	DATE: 9/10/2021	PART NUMBER: CC-BO		REVISION A

Sheet1 of 1