| REVISIONS | | | | |
|---|---|---|---|---|
| ZONE | REV. | DESCRIPTION | DATE | APPROVED |
| | A | RELEASED FOR PRODUCTION | 6/7/2022 | DMM |

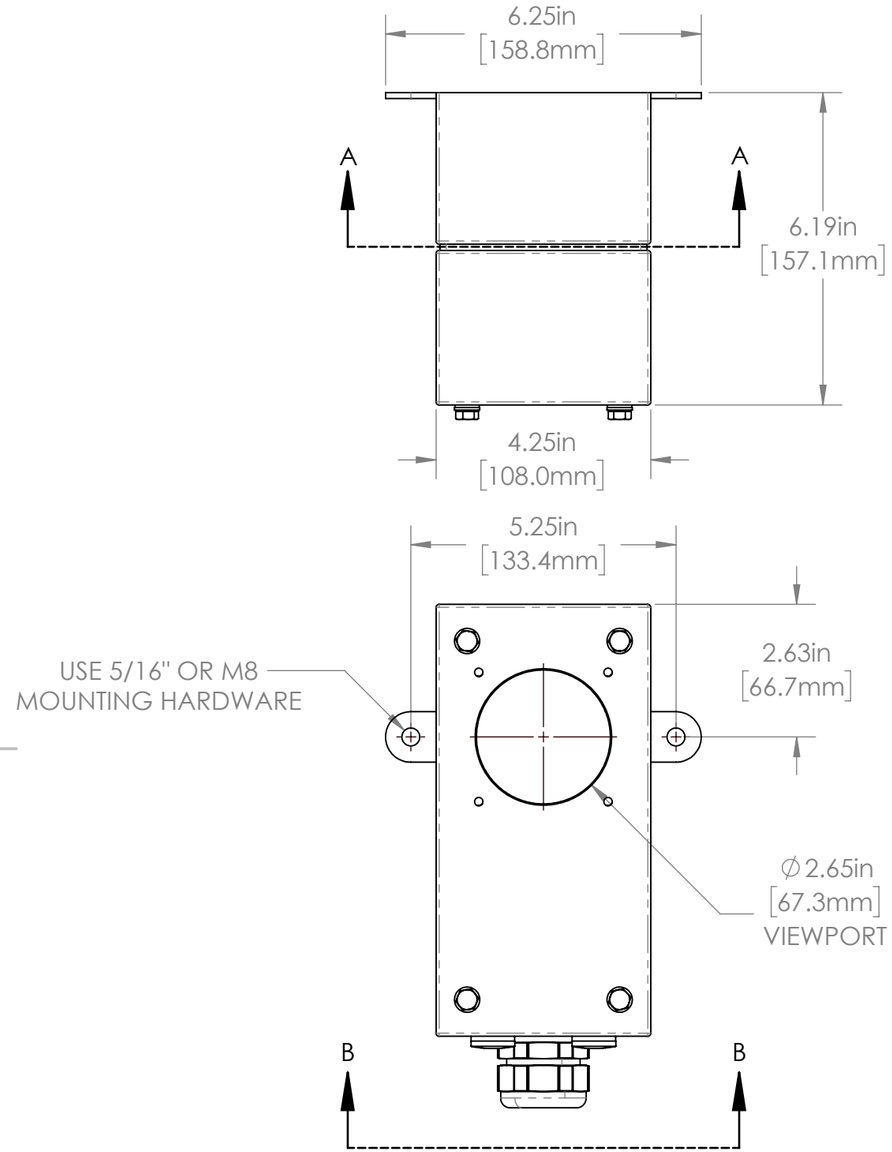


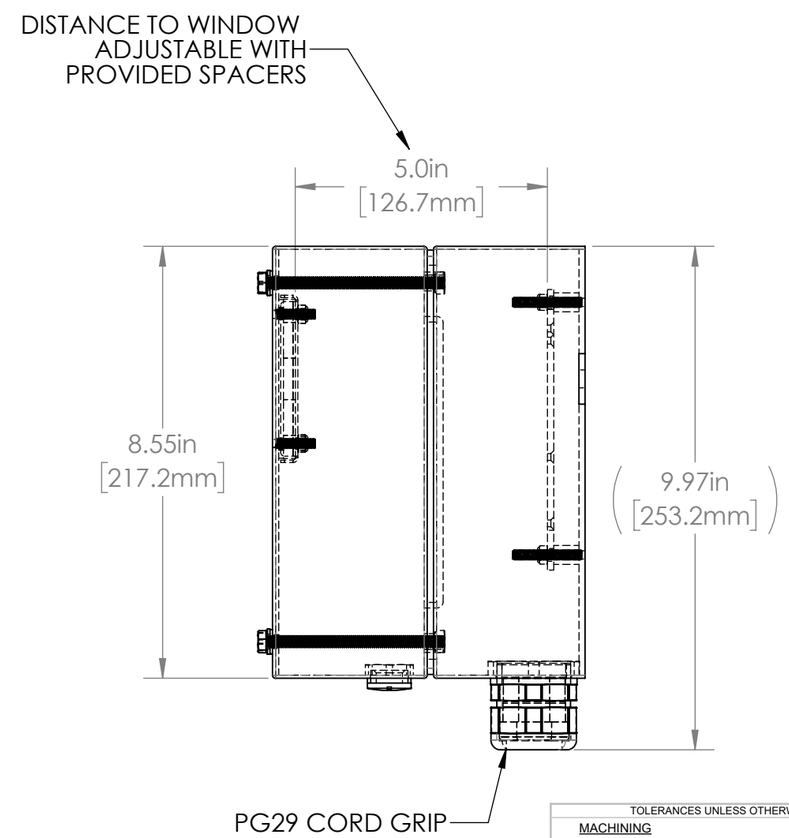


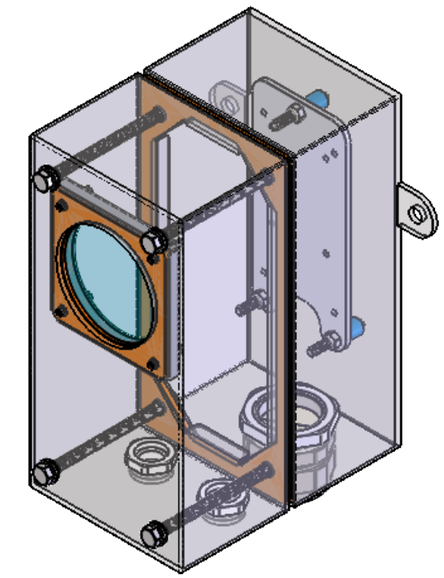

## L7 SERIES PROPERTIES TABLE

| ENVIRONMENT RATING | IP68* | |
|---|---|---|
| | (*RATING MAY CHANGE IF INSTALLER MILLS CABLE GLAND OUTSIDE OF TOLERANCE) | |
| **COMPONENT** | **MATERIAL** | **FINISH** |
| BODY | 316 SS | BURNISHED |
| VIEWPORT | CLEAR FLOW COAT ACRYLIC | ABR2 |
| GASKET | SILICONE | NONE |
| ARM/ADAPTOR | 6061 ALUM | NONE |
| HARDWARE | 316 SS - EXTERNAL, 18-8 SS - INTERNAL | NONE |

TOLERANCES UNLESS OTHERWISE SPECIFIED

MACHINING
X.X 0.0250"
X.XX 0.0100"
X.XXX 0.0050"
X.XXXX 0.0005"
ANGULAR 0.5°
DEBURR ALL

SHEET METAL
HOLE TO HOLE (SAME SURFACE)
X.X 0.030"
X.XX 0.010"
X.XXX 0.005"
HOLE TO FOLDED EDGE
X.X 0.035"
X.XX 0.025"
X.XXX 0.015"
FOLD TO FOLD
X.X 0.045"
X.XX 0.035"
X.XXX 0.020"
ANGULAR 1.0°

THIS PRINT IS THE PROPERTY OF APG VISION LLC. THE INFORMATION CONTAINED HEREIN IS CONFIDENTIAL. IT IS NOT TRANSFERABLE. IT IS FURNISHED WITH THE CLEAR UNDERSTANDING THAT IT IS NOT TO BE TRACED, REPRODUCED OR USED IN ANY PROCESS OF MANUFACTURING WITHOUT WRITTEN PERMISSION FROM THE OWNER AND IS RETURNABLE UPON DEMAND. ANY INFRINGEMENT UPON THE PATENT RIGHTS SHOWN HEREIN, WHETHER IN PART OR WHOLE, WILL BE PROSECUTED.

AS PART OF OUR POLICY OF CONTINUING DEVELOPMENT, APG VISION LLC RESERVES THE RIGHT TO ALTER SPECIFICATIONS WITHOUT PRIOR NOTICE.

APG Vision LLC
4055 Alpha Drive
Allison Park, PA 15101 USA
Phone +1 (412) 487-8211
apgvision.com

DESCRIPTION: L7 ENCLOSURE, EXTENDED UPPER & LOWER BODY

MATERIAL: SEE PROPERTIES TABLE

FINISH: SEE PROPERTIES TABLE

| DRAWN BY: | DATE: | SCALE: | SHT-SIZE: | APPROX. WEIGHT (LBS) |
|---|---|---|---|---|
| TWD | 6/7/2022 | 1:3 | B | 6.2462 |

| CHECKED BY: | DATE: | PART NUMBER: | REVISION |
|---|---|---|---|
| DMM | 6/7/2022 | L7-DR | A |

Sheet1 of 2

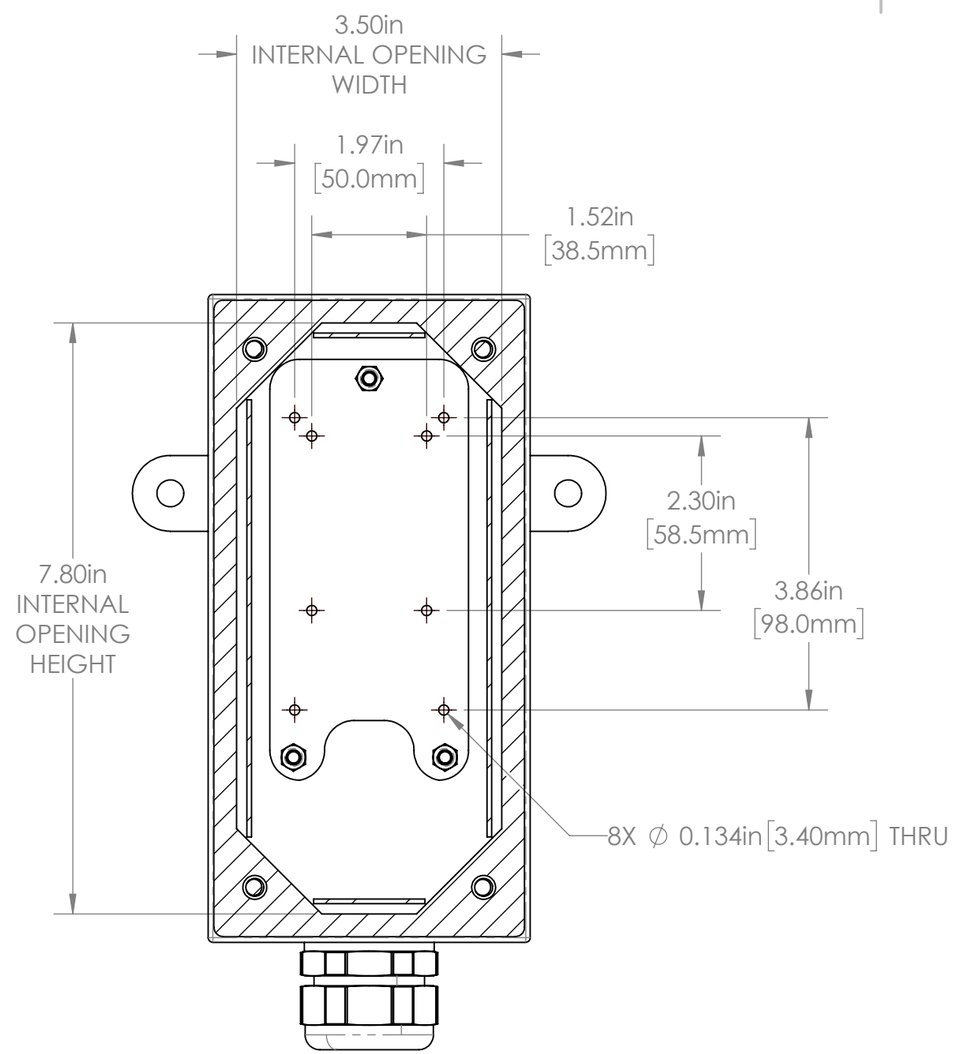


SECTION A-A

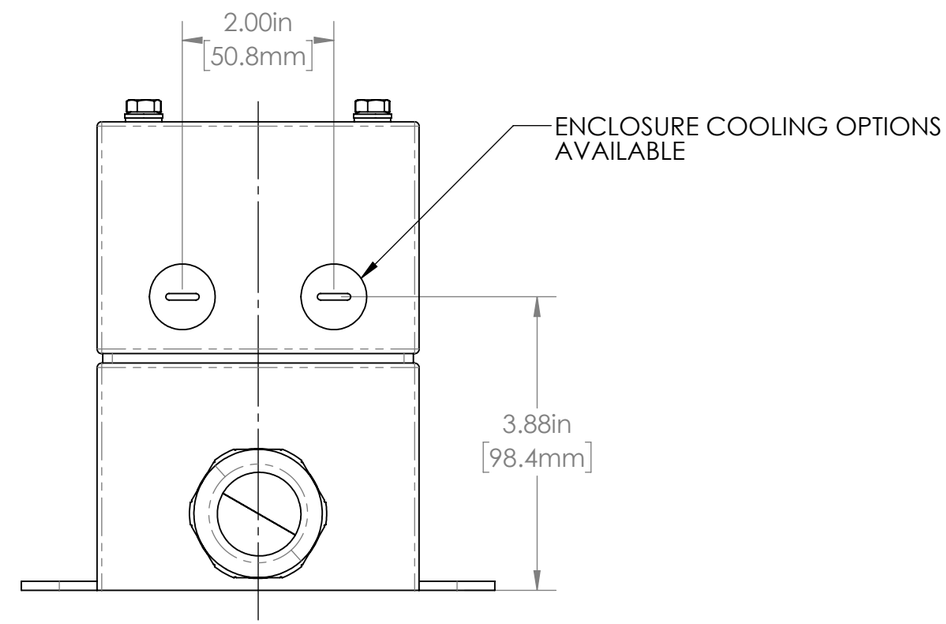


SECTION B-B

TOLERANCES UNLESS OTHERWISE SPECIFIED

| MACHINING | |
|---|---|
| X.X | 0.0250" |
| X.XX | 0.0100" |
| X.XXX | 0.0050" |
| X.XXXX | 0.0005" |
| ANGULAR | 0.5° |
| DEBURR ALL | |

| SHEET METAL | |
|---|---|
| HOLE TO HOLE (SAME SURFACE) | |
| X.X | 0.030" |
| X.XX | 0.010" |
| X.XXX | 0.005" |
| HOLE TO FOLDED EDGE | |
| X.X | 0.035" |
| X.XX | 0.025" |
| X.XXX | 0.015" |
| FOLD TO FOLD | |
| X.X | 0.045" |
| X.XX | 0.035" |
| X.XXX | 0.020" |
| ANGULAR | 1.0° |

THIS PRINT IS THE PROPERTY OF APG VISION LLC. THE INFORMATION CONTAINED HEREIN IS CONFIDENTIAL. IT IS NOT TRANSFERABLE. IT IS FURNISHED WITH THE CLEAR UNDERSTANDING THAT IT IS NOT TO BE TRACED, REPRODUCED OR USED IN ANY PROCESS OF MANUFACTURING WITHOUT WRITTEN PERMISSION FROM THE OWNER AND IS RETURNABLE UPON DEMAND. ANY INFRINGEMENT UPON THE PATENT RIGHTS SHOWN HEREIN, WHETHER IN PART OR WHOLE, WILL BE PROSECUTED.

AS PART OF OUR POLICY OF CONTINUING DEVELOPMENT, APG VISION LLC RESERVES THE RIGHT TO ALTER SPECIFICATIONS WITHOUT PRIOR NOTICE.

APG Vision LLC
4055 Alpha Drive
Allison Park, PA 15101 USA
Phone +1 (412) 487-8211
apgvision.com

DESCRIPTION: L7 ENCLOSURE, EXTENDED UPPER & LOWER BODY

MATERIAL: SEE PROPERTIES TABLE

FINISH: SEE PROPERTIES TABLE

| DRAWN BY: | DATE: | SCALE: | SHT-SIZE: | APPROX. WEIGHT (LBS) |
|---|---|---|---|---|
| TWD | 6/7/2022 | 1:2 | B | 6.2462 |

| CHECKED BY: | DATE: | PART NUMBER: | REVISION |
|---|---|---|---|
| DMM | 6/7/2022 | L7-DR | A |

Sheet2 of 2