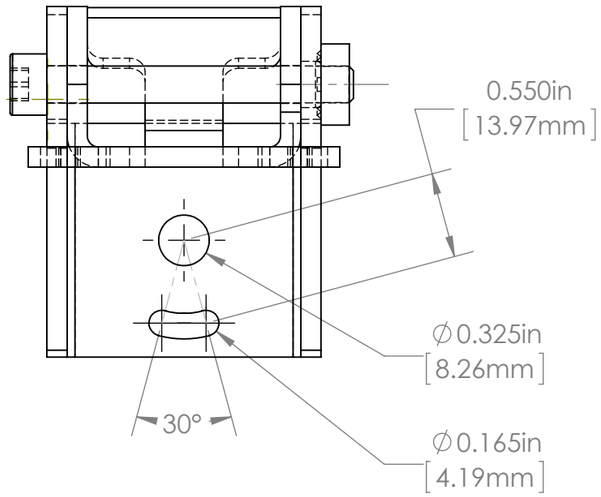

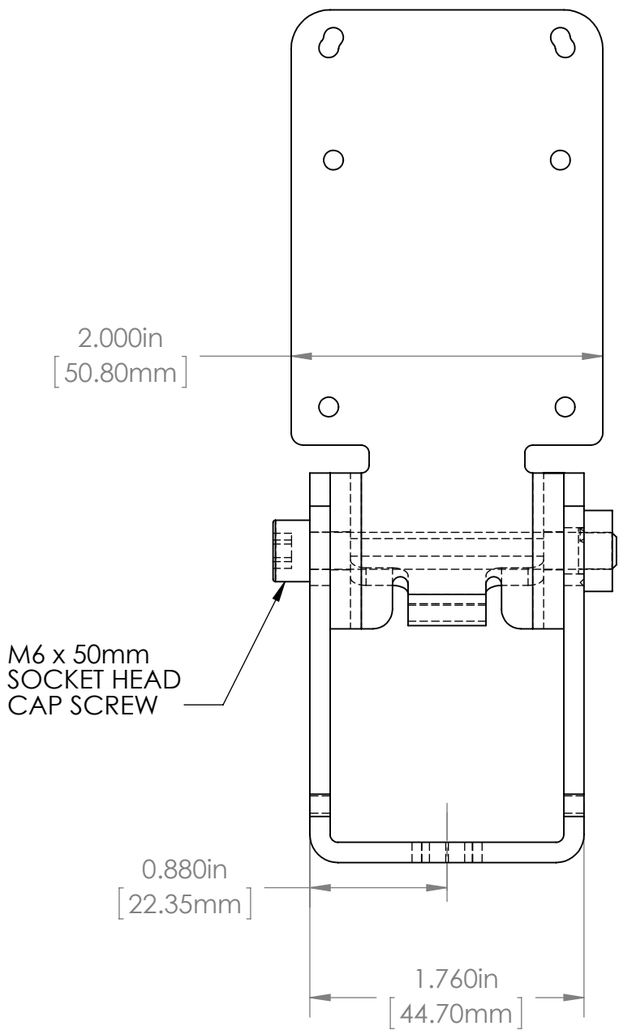

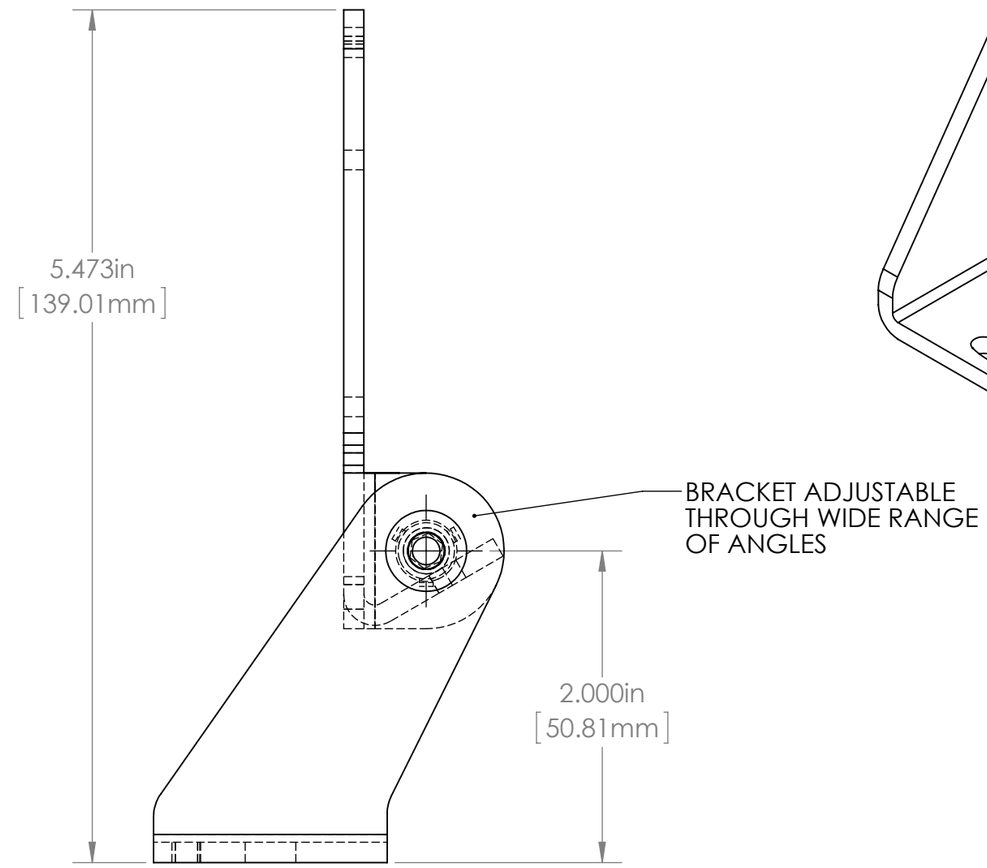

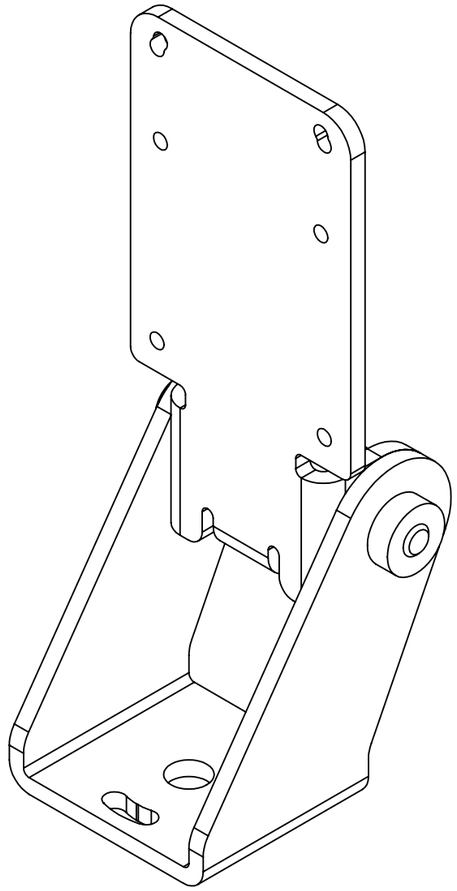

NO.	CHANGE	DATE	INIT.

UNLESS OTHERWISE SPECIFIED:
DIMENSIONS ARE IN INCHES
SURFACE FINISH:
TOLERANCES: .000= +/- 0.005"
.00= +/- 0.010"
LINEAR:

FINISH: BURNISHED
DEBUR AND BREAK SHARP EDGES

	NAME	SIGNATURE	DATE
DRAWN	SCHUBERT		1/26/2011
CHK'D			
APPV'D			
MFG			
Q.A			

NOTES:

Allison Park Group, Inc. (APG)
4055 Alpha Drive
Allison Park, PA 15101 USA

Phone +1 (412) 487-8211
Fax +1 (412) 486-3157

www.apgvision.com

MATERIAL: 304 Stainless Steel

WEIGHT:

DO NOT SCALE DRAWING

REVISION

This document is the property of APG and is considered company confidential. The information in this document is the property of APG and may not be used, reproduced, or distributed in whole or in part without the prior written permission of APG

TITLE: PTU-BK (DM300 Inline, IS-7000 upright P&T Dims) R1.1

DWG NO. PTU-BK

A3

SCALE:1:2

SHEET 1 OF 1